Motor Performance Curve

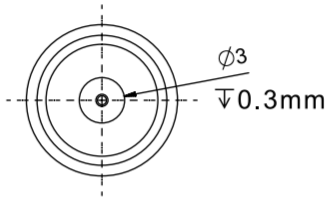

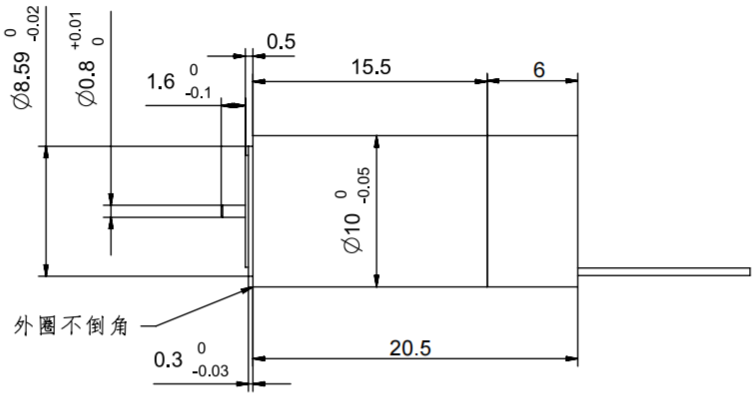

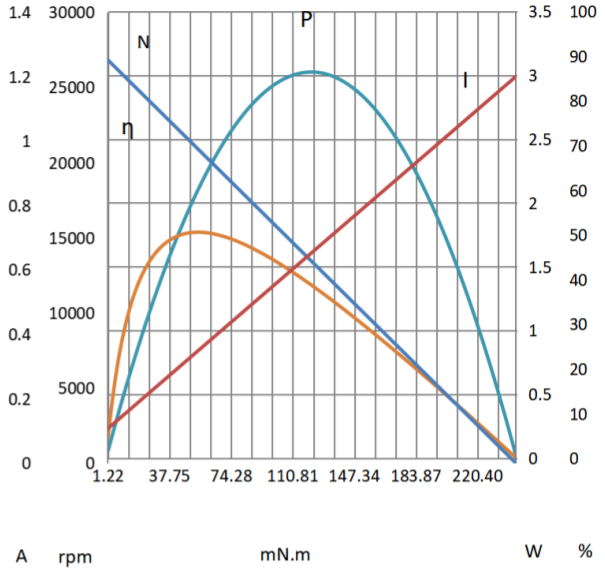

1. Motor Type: Coreless Brushless Motor
2. Operating Voltage: 12 V/DC
3. Nominal Speed: 22950 RPM
4. Nominal Current: 0.265 A
5. Nominal Torque: 0.642 mNm
6. No-load Speed: 27000 RPM
7. No-load Current: 100 mA
8. Max. Efficiency: 50.6 %
9. Speed: 22545 RPM
10. Current: 0.2815 A
11. Torque: 0.706 mNm
12. Max. Output Power: 3.025 W
13. Speed: 13500 RPM
14. Current: 0.65 A
15. Torque: 2.14 mNm
16. Stall Current: 1.2 A
17. Stall Torque: 4.28 mNm
18. Terminal Resistance: 10 Ω
19. Terminal Inductance: 0.137 mH
20. Torque Constant: 3.89 mNm/A
21. Speed Constant: 2250 rpm/V
22. Speed/Torque Constant: 6309.15 rpm/mNm
23. Mechanical Time Constant: 3.69 ms
24. Rotor Inertia: 0.056 g·cm²
25. Number of Pole Pairs: 2
26. Number of Phases: 3
27. Typical Noise Level: ⩽50 dB

Built-in Driver: pin1-4 wiring
pin1: GND Black
pin2: VDD Red
pin3: RXD White
pin4: TXD Red



设计		第一视觉画法	10mm coreless brushless motor + driver (Motor Type)
审核			TSL-KW1016+TTL (Motor Model)
批准		未注线性与角度尺寸公差： GB\T1804-m eqv ISO 2768-1:m	Tsinglin Micro Motors Limited
日期			